Merlin®
the automatic choice

tiltmaster®

The perfect power partner for tilt doors

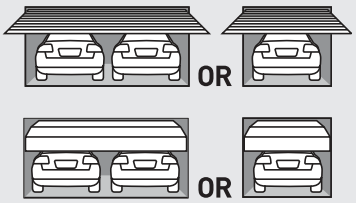

DOOR TYPES: residential tilt and sectional doors **DOOR SIZE:** doors up to 20m²

Key Benefits

Compliant to Australian and New Zealand Standard AS/NZS 60335-2-95

Security+2.0

Transmitters communicate on multiple frequencies with encrypted rolling code. This ensures the strongest frequency is selected every time, virtually eliminating interference while providing the highest level of security.

Up to 75% less energy*

Advanced technology uses less than 1 watt of power whilst in standby mode, meeting the world's toughest energy standards.

Quiet and Powerful Motor

The powerful and fast DC motor is quiet and built to last with the strength to open any branded domestic door.

Improved Transmitter Range

Tested against other products, these transmitters have up to 18% better range which means you can start opening your garage door sooner.

Soft Start / Stop Function

Designed to ensure smooth and quiet door operation.

7 Year Warranty

Backed by a 7 year / 15,000 cycle warranty** we stand behind our products with an after sales support team that we believe are the best in the industry.

Standard Merlin Safety Features

Premium Automatic Safety Reverse

With its automatic safety function your garage door will stop and reverse automatically if obstructed going down or stop going up.

Automatic Force Sensing

Equipped with automatic force sensing, with each operation the garage door opener monitors and adjusts the force needed to open your garage door.

Manual Release

In case of power failure you can simply activate the manual release to open your garage door.

*when compared to other available products ** conditions apply

Kit Contents

1 x Powerhead

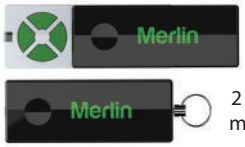

2 x Four channel key ring mini- transmitters E950M

Two channel wireless wall button E138M

SPECIFICATIONS

- 24V DC motor with thermal overload protection
- Input voltage: 240V AC
- Rated door area up to 20m²
- Max door weight: up to 130kg
- Max peak pulling force: 1000 N
- C-rail with belt drive
- 433.92, 433.30, 434.54 MHz AM radio with Chamberlain Security + 2.0 rolling code technology
- Up to 64 memory registers
- Courtesy light: LED
- Min headroom required: 30mm

tiltmaster®

Merlin®
the automatic choice

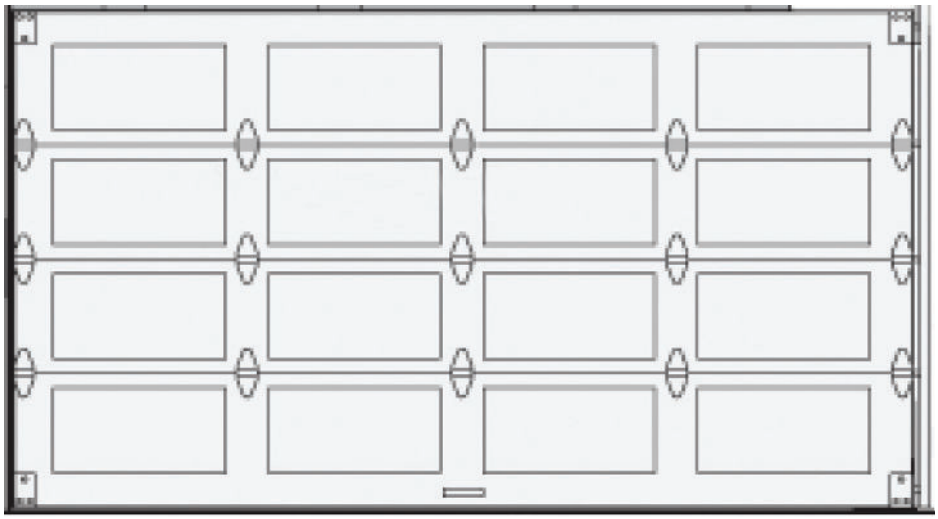

DOOR SPECIFICATIONS

- Maximum lifting under spring tension = 20kg
- Suitable for steel and timber spring balanced doors

DOOR OPENING AND CLOSING TIMES

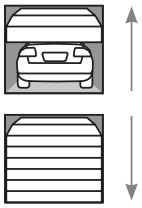

18 seconds

21 seconds
(based on a 2.2m high door)

Door height: 3.5m, Door width: 5.7m, Total door area 20m^2
Single dwelling, max door weight: up to 130kg

TYPICAL INSTALLATION - SECTIONAL DOOR

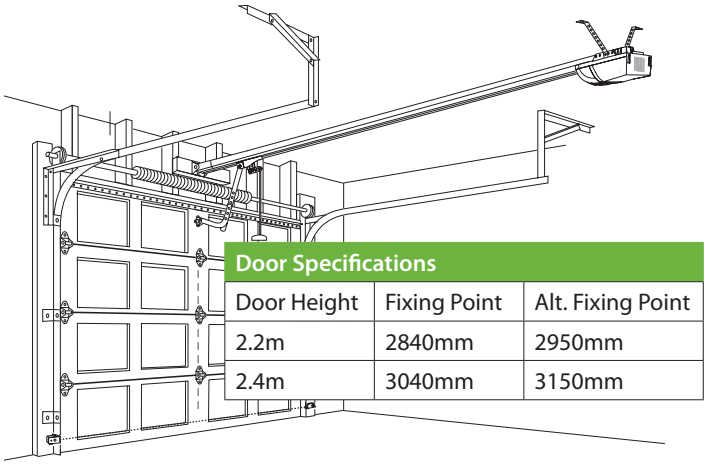

Door Specifications		
Door Height	Fixing Point	Alt. Fixing Point
2.2m	2840mm	2950mm
2.4m	3040mm	3150mm

TYPICAL INSTALLATION - TILT DOOR

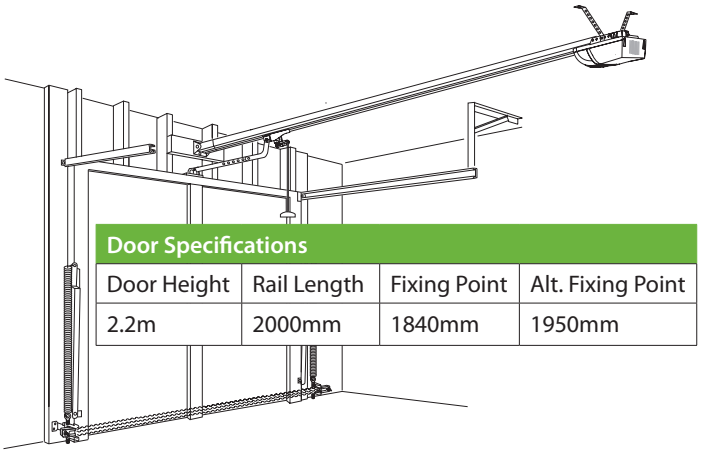

Door Specifications			
Door Height	Rail Length	Fixing Point	Alt. Fixing Point
2.2m	2000mm	1840mm	1950mm

OPTIONAL ACCESSORIES

Premium+ four channel transmitter E960M

Wall or visor mounted three channel transmitter E943M

Wall or visor mounted single channel transmitter E940M

3 channel mini transmitter E945M

Wireless open door monitor CLDM1ANZ

Protector system safety beam sensors 774ANZ

Wireless keypad E840M

CHAMBERLAIN®

The World's Largest Manufacturer of Garage Door Openers

Australia Phone: 1800 638 234 **Fax:** 1800 888 121 **Web:** gomerlin.com.au
New Zealand Phone: 0800 653 667 **Fax:** 0800 653 663 **Web:** gomerlin.co.nz

™ Trademark of The Chamberlain Group, Inc. ® Registered Trademark of the Chamberlain Group, Inc.
© 2015 The Chamberlain Group, Inc.

M0715S040